Later jester

for solo contrabass clarinet and electronics (6.0)

Clara Maïda

(13’43)

SOUND RIDER - 2012

The electronics of **Later jester** consists of 12 six-channel sound files to be triggered by the soloist. For a proper balance between the electronic and the instrumental sound the clarinet needs to be amplified with one or two microphones. There is no further processing of the clarinet sound.

Requirements:

For the sound file playback.
- 6 loudspeakers arranged in a circle around the audience (see next page).
- A computer (MacOS) running Max6, incl. audio interface with at least 6 outputs (a Max6 patch will be provided together with the sound files) for the triggering of the sound files.
- A sustain pedal (on stage).
- A pedal to MIDI converter (the converter must generate a NoteOn, a Control Change or a Program Change message from the pedal contact).
- A MIDI interface.
- Optional: an IPad with the MIRA app as a cue display for the soloist for the amplification.
- 2 condenser cardioid microphones (one near the bell, one above the instrument).

Setup of the loudspeakers:

ProTools : 6-Channel session
1: L (Left) - **2: C** (Centre) - **3: R** (Right) - **4: RS** (Right Surround) - **5: CS** (Centre Surround) - **6: LS** (Left Surround).
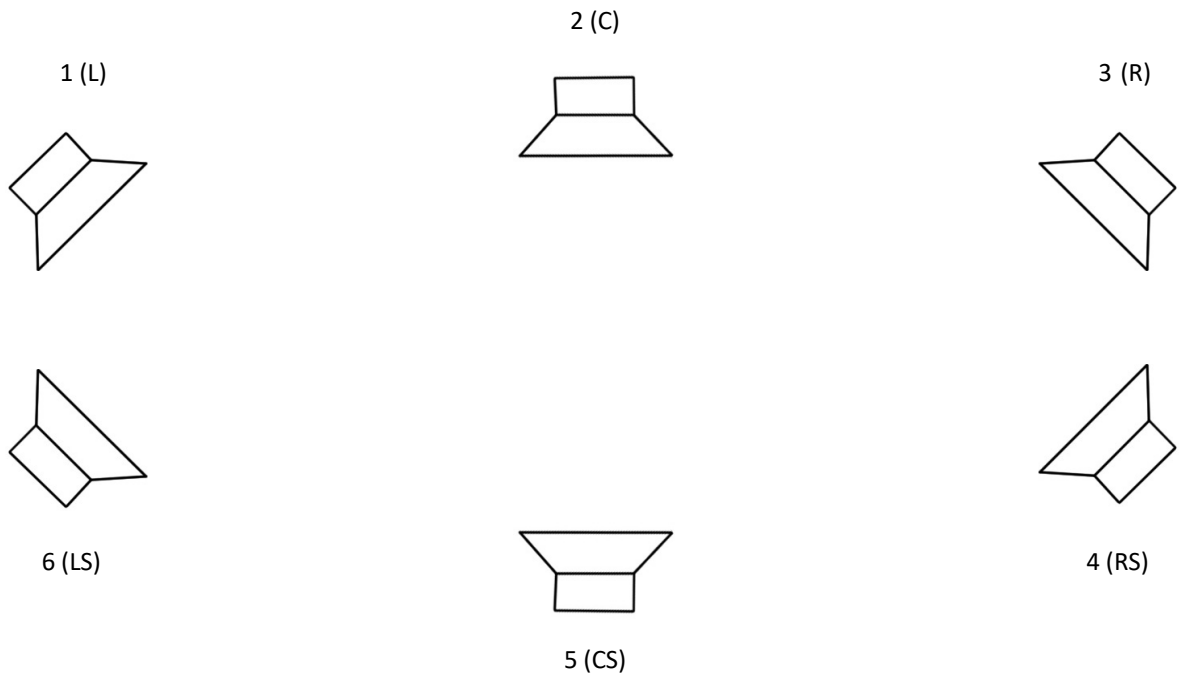
Channel to loudspeaker assignment